P-51 MUSTANG Personal CAD Project

Introduction

After long thought and research into what I wanted to create for my personal CAD project, I choose to create an airplane based off of the WWII fighter the P-51 Mustang. This was a particular interest of mine personally because I am very interested in the machines the armed forces used in WWII because they are not complex or computer controlled. I think that it is interesting to learn how these planes worked and how they are put together.

Design

I based my design off of the above image of a remote controlled P-51. It gave me all of the angles I needed to be able to create my own model of the P-51. By far the most difficult part of the CAD design was the scaling. I ended up using 1 inch = 2.5 feet in my final design. Scaling curves and rounded edges proved to be time consuming but once I worked out how to properly scale the model I became efficient and the design process went smoothly.

CAD Photos

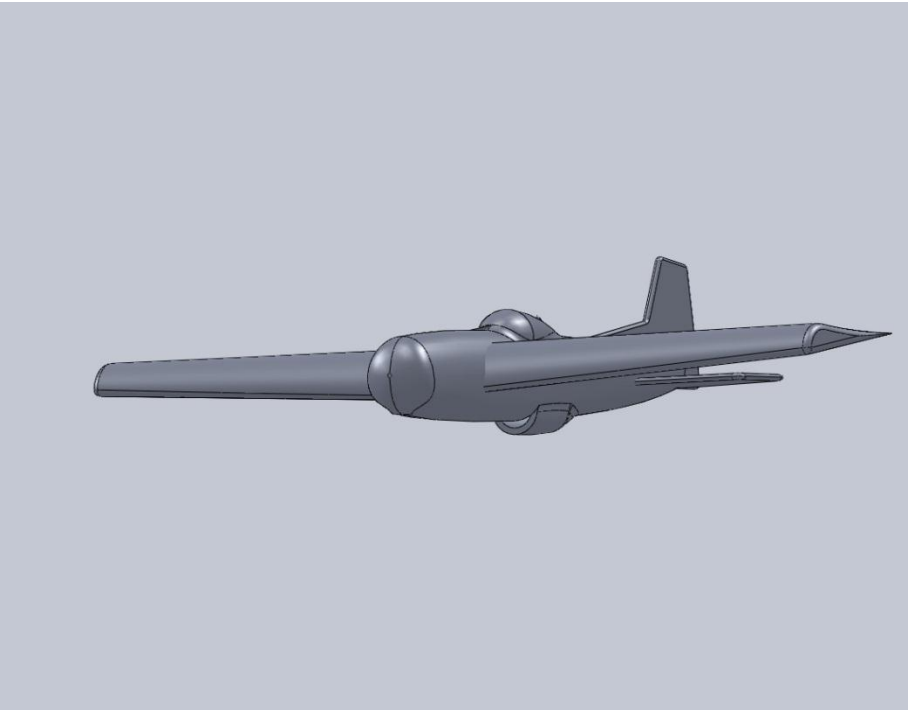

Above: This is an isometric view of what the P-51 looks like. Notice the air duct and cockpit were the two most difficult parts to implement.

Below: Top view of the aircraft. Mating the wing proved to be very difficult because the body was a cylinder. The wing did eventually mate and the model looks very close to an actual P-51.

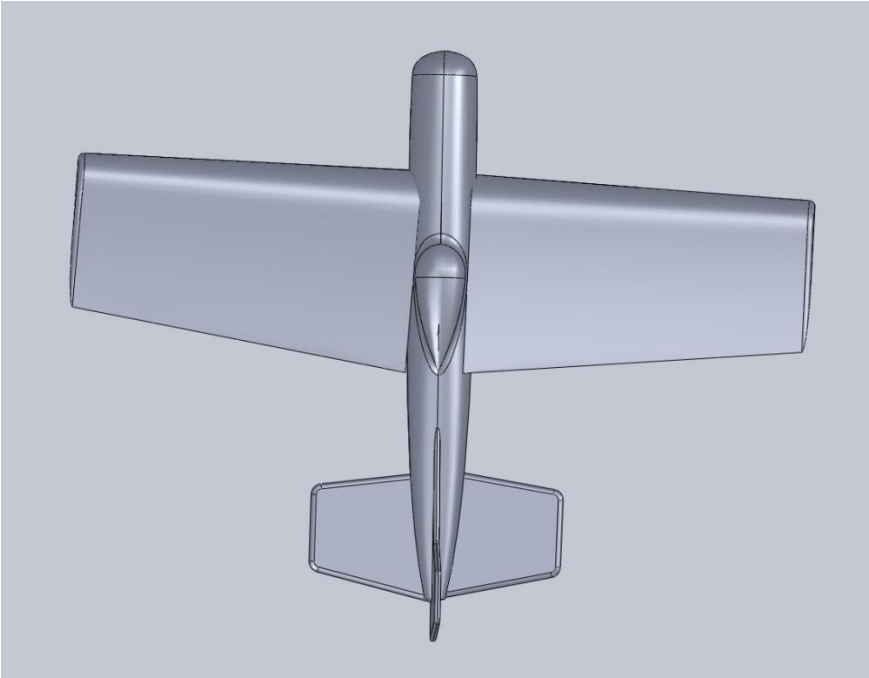

Above: The wings are a typical airfoil shape. I used a mirror feature to create two identical wings.

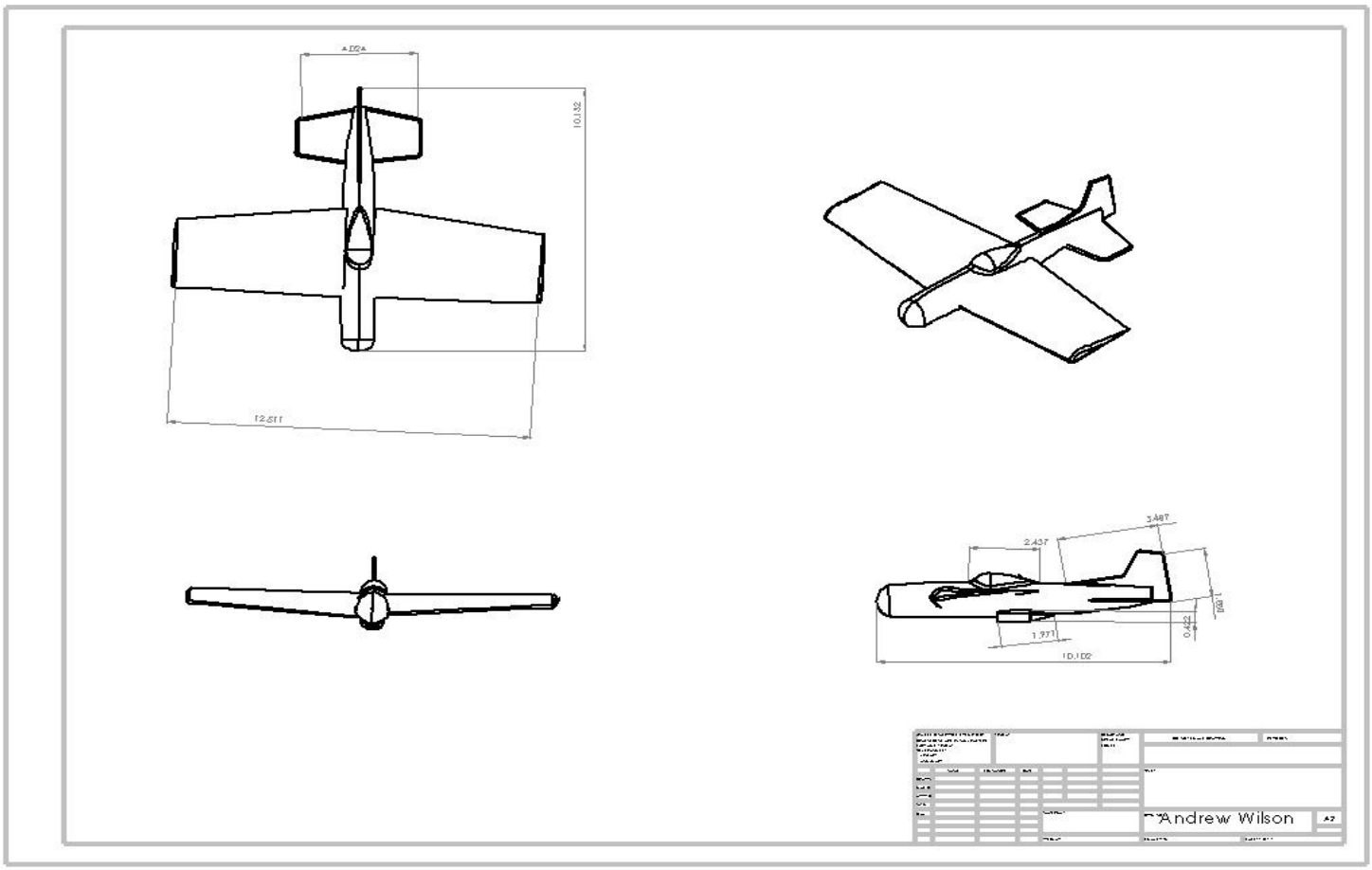

This is the final drawing with dimensions. There are many angles and unnecessary dimension that I did not incorporate in the drawing.

Conclusion

Overall I had a lot of fun with this project. It greatly helped me learn how to use features in SolidWorks that we had never previously used. It was tedious and at some points frustrating but now I have the knowledge and skills to go back and create similar objects with ease. This project also has helped me to visualize designs. It has brought ideas to my head that would not have previously been possible and I am glad we were assigned this project.